COMF ELECTRONIC COMPANY

EXPORTERS, IMPORTERS & MANUFACTURERS
香港 九龍灣臨興街 32 號美羅中心 1 期 15 樓 11 室
Flat 11, 15/F., METRO CENTRE 1, 32 LAM HING ST.,
KOWLOON BAY, HONG KONG
TEL: (852) 2770 5181 **FAX (852)2798 8129**
WEB: www.comf-hk.com **Email: sales@comf-hk.com**

Product Data Sheet
BH-321-6A

Specification

Cell Size:	2 X AA Cell, UM-3 **With Polarity Protection Posts**
Body:	Polypropylene, 94HB Black
Wire:	26AWG UL1007 150mm ±5mm Stripped And Tinned 5mm ±1mm
Terminals:	Nickel plated brass
Springs:	Ø0.65mm Nickel plated spring steel
Compliance:	

BH-321-6B Shown With Snap Terminals

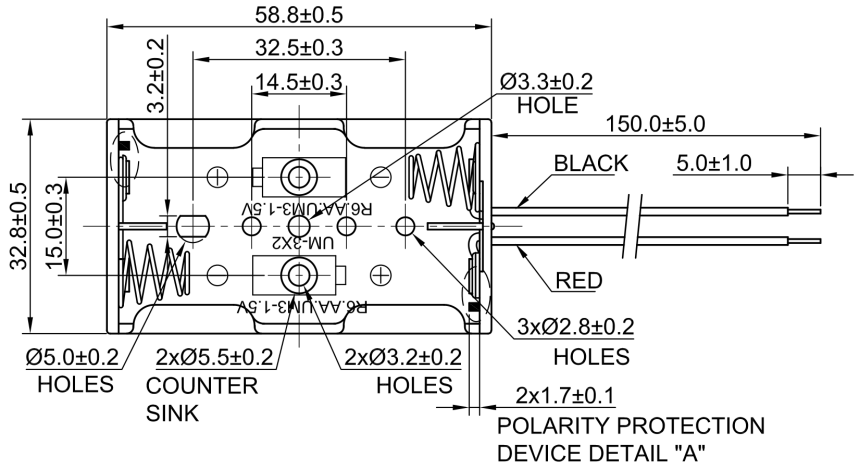

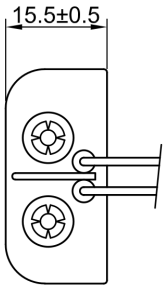

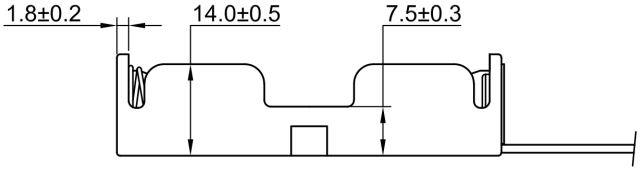

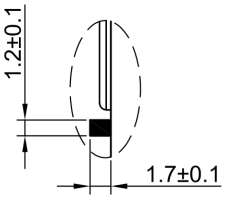

POLARITY PROTECTION DEVICE
DETAIL "A" S=2

Information contained in the data sheet is subject to change without notice and replaces all data sheets previously supplied. No responsibility is accepted for any error in or omission from it or for any use made of it. Users of this data sheet should check for themselves at time of ordering against the production specification drawing. Users should satisfy themselves as to the suitability of the product for their purpose and not make any assumptions based on information included or omitted.