COMF ELECTRONIC COMPANY

EXPORTERS, IMPORTERS & MANUFACTURERS
香港 九龍灣臨興街 32 號美羅中心 1 期 15 樓 11 室
Flat 11, 15/F., METRO CENTRE 1, 32 LAM HING ST.,
KOWLOON BAY, HONG KONG
TEL: (852) 2770 5181 **FAX (852)2798 8129**
WEB: www.comf-hk.com **Email: sales@comf-hk.com**

Product Data Sheet
PBH-331-IP65-A

Specification

Cell Size:	3 X AA Cell, UM-3
Wire:	AWG 24, UL1007 150mm ± 5mm Stripped and Tinned: 5mm ±1mm
Body:	ABS, Black
Terminals:	0.3mm Nickel plated iron
Springs:	Ø0.5mm Nickel plated spring steel
Compliance:	intertek intertek RoHS COMPLIANT REACH COMPLIANT



PBH-331-IP65-AS Shown With Switch

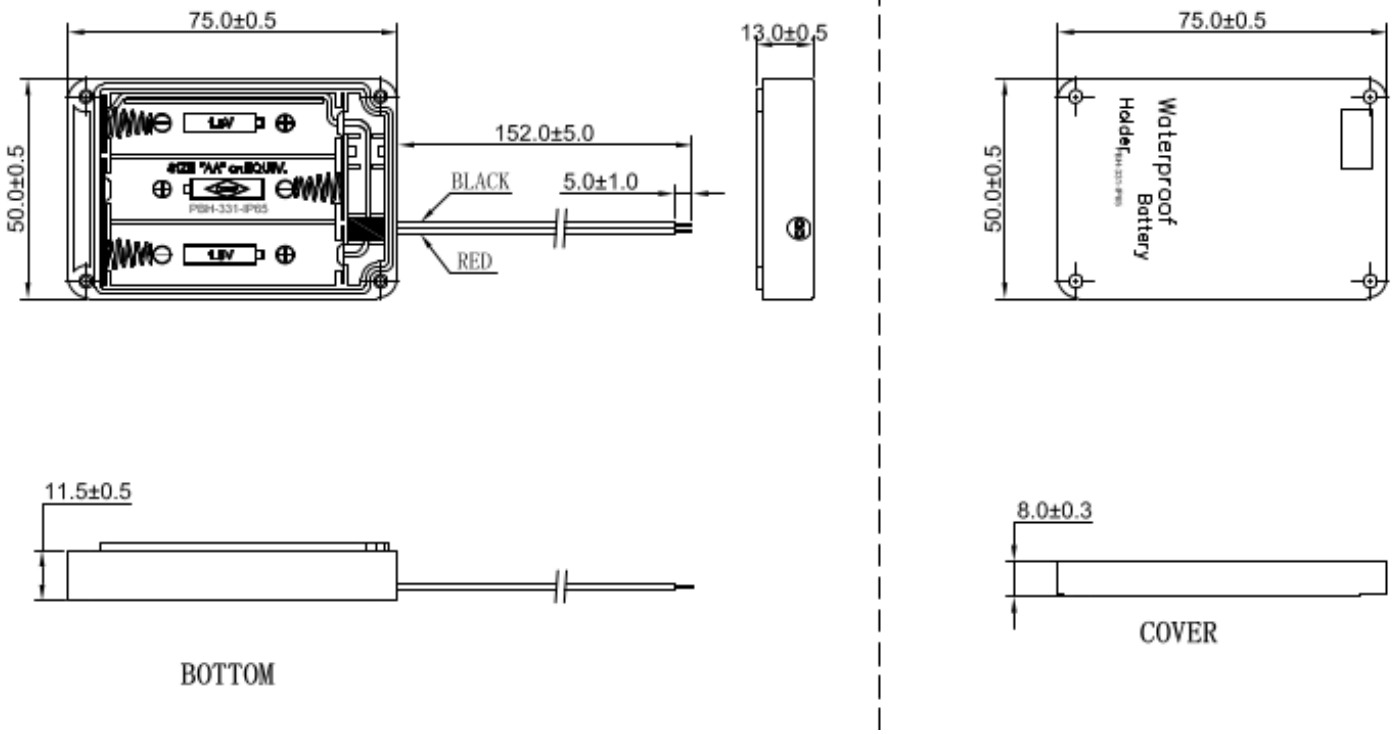

Information contained in the data sheet is subject to change without notice and replaces all data sheets previously supplied. No responsibility is accepted for any error in or omission from it or for any use made of it. Users of this data sheet should check for themselves at time of ordering against the production specification drawing.
Users should satisfy themselves as to the suitability of the product for their purpose and not make any assumptions based on information included or omitted.